RF CONNECTORS / 1.0/2.3

R13PC01R	DIMENSIONS	R13JCB01R	DIMENSIONS
	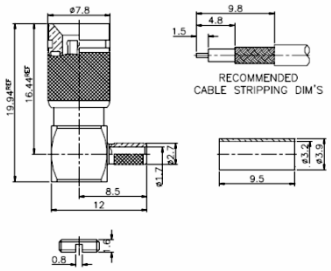		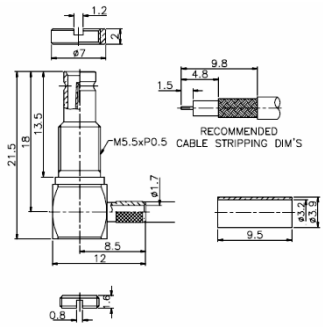
1.0/2.3 PLUG CRIMP RIGHT ANGLE		1.0/2.3 JACK CRIMP BULKHEAD RIGHT ANGLE	

R13PC01	DIMENSIONS	R13JCB01	DIMENSIONS
	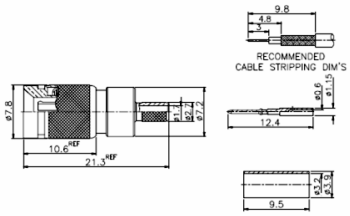		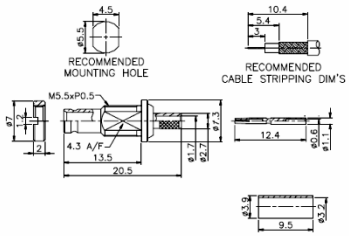
1.0/2.3 PLUG CRIMP STRAIGHT		1.0/2.3 JACK BULKHEAD CRIMP STRAIGHT	

		R13SJ01	DIMENSIONS
			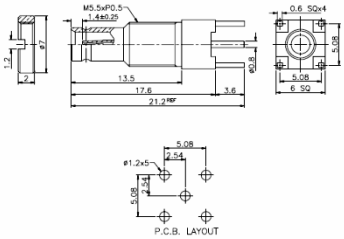
		1.0/2.3 JACK P.C.B. MOUNT SRTAIGHT	

		R13SJ01R	DIMENSIONS
			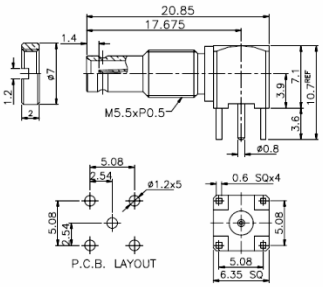
		1.0/2.3 JACK P.C.B. MOUNT RIGHT ANGLE	